Contactor Mixing and Separation of Hydrophobic Ionic Liquid and Immiscible Fluids

J.F. Birdwell Jr.[1], J. McFarlane[1], D.W. DePaoli[1], and D.L. Schuh[2]

[1]Nuclear Science and Technology Division, Oak Ridge National Laboratory, [2] University of Wisconsin-Madison

Advanced Ionic Liquid Separations Using a Centrifugal Contactor

- Ionic liquid solvents are expensive relative to common industrial solvents, and so economics demands that process volumes be minimized. Industrial use requires process intensification, such as gained through use of a centrifugal contactor.
- Possible applications in chemicals manufacturing, metals extraction, and environmental remediation
- Need physical properties of solvents and mixtures, along with hydraulic performance data, to create an accurate model to predict optimum liquid-liquid phase separation

Three liquid-liquid systems were analyzed to explore a range of density and viscosity characteristics

- Diethylene glycol dibutyl ether (dibutyl carbitol) and nitric acid (*extraction of noble or heavy metals*)
- 1-butyl-3-methyl imidazolium bis(perfluoroethyl sulfonyl)imide (Bmim BETI) with cyclohexane (*chemical processing*)
- Bmim BETI with water (*environmental applications*)

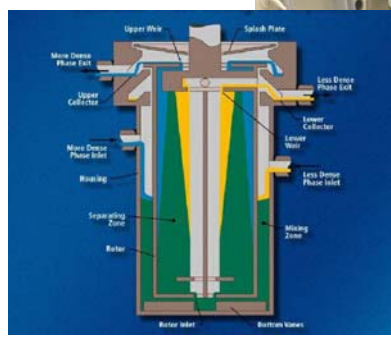

Centrifugal contactor setup for ionic liquid systems showing configuration of input and output flows

Instruments and Techniques Used to Determine Physical Properties:

- Contact angle meter
- Ring tensiometer
- Dispersion number by agitation
- Density
- Viscosity
- Purity by Raman Spectroscopy and thermogravimetric analysis
- Thermal stability by differential thermal analysis

A ring tensiometer was used to measure surface and interfacial tensions

Hydraulic Performance Data Were Collected by Varying

- Speed of rotor
- Weir size
- Total volumetric flow rate
- Phase ratio (relative flow rates)
- Concentration of liquids

Predicted Bmim BETI/Water Throughput in a 5-cm Centrifugal Contactor

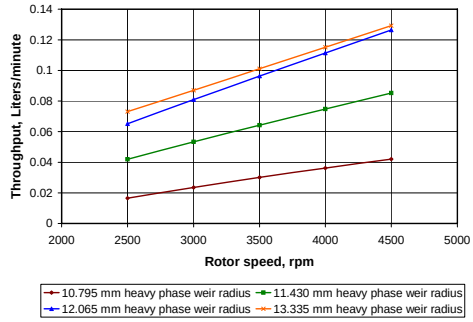

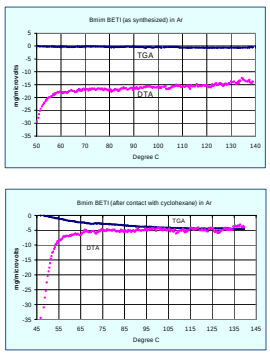

Entrainment of cyclohexane in Bmim BETI is easily removed by aeration

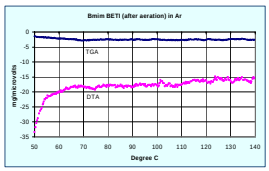

No phase transitions
0.1% mass loss from as synthesized
2.3% mass of entrained cyclohexane after contact
<1% cyclohexane after aeration

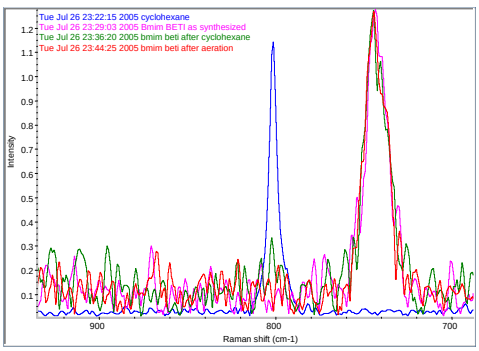

Raman spectra for a Bmim BETI/cyclohexane system showing removal of residual entrained cyclohexane by aeration.

Results and Discussion

- Dibutyl Carbitol and Nitric Acid:
  - Separation effectiveness depended on concentration of nitric acid
    - Fast when using 0.5M nitric acid
    - Slow with less than 0.1M nitric acid
  - Separation also depended on purity of dibutyl carbitol
- Bmim BETI and Water
  - Separation by gravity settling took over 1 hour
  - TGA/DTA results show that separation effective in contactor
- Bmim BETI and Cyclohexane:
  - Good separation under all conditions, 5-7 seconds.
  - The dispersion number for Bmim BETI/cyclohexane is 3 orders of magnitude higher than for Bmim BETI/H_2O
- Design of contactor needs to be optimized for use with very viscous liquids

Acknowledgments:

Assistance of Huimin Luo, Sheng Dai, Rodney Hunt

DOE Student Undergraduate Laboratory Internship (SULI)

UT-Battelle under contract to DOE-Fossil Energy, contract #AB05483OR41

UT-BATTELLE
OAK RIDGE NATIONAL LABORATORY

THE UNIVERSITY WISCONSIN MADISON